REVISIONS			
REV.	DESCRIPTION	DATE	APPROVED
A	BASELINE RELEASE	4/8/97	
B	LENGTHENED TO 4.400, ADDED 5X ø0.040 VENT HOLES, CHANGED RAISED AREA	7/29/97	

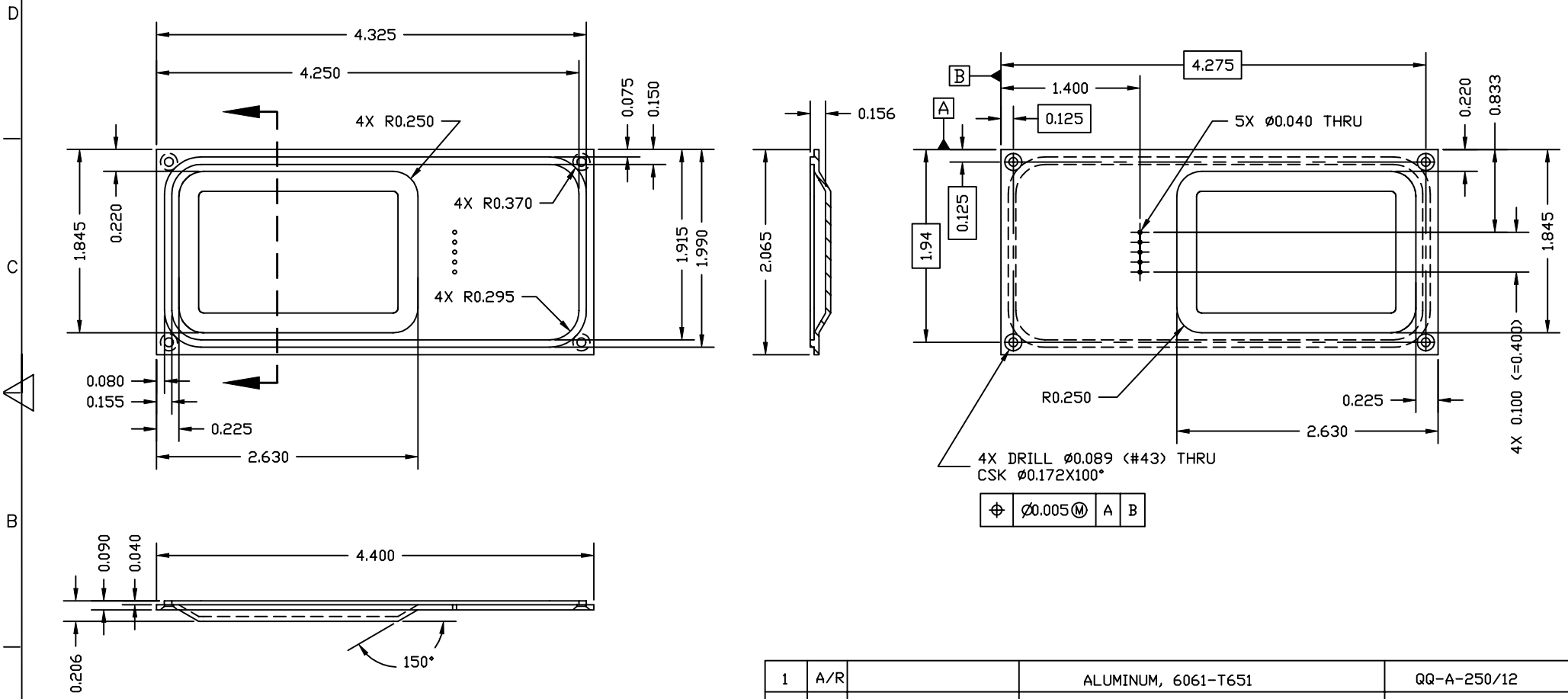

ITEM#	QTY	PART NUMBER	NOMENCLATURE	MATERIAL SPECIFICATION
1	A/R		ALUMINUM, 6061-T651	QQ-A-250/12

e a g

25.4 mm
1 inch

THIRD ANGLE PROJECTION

TOLERANCES (EXCEPT AS SPECIFIED)

OVER	TO	TOLERANCE
0	1.999	±0.004
2	9.999	±0.02
10	-	±0.04
ANGLES		±1°

SURFACE FINISH 1.6

SURFACE TREATMENT
ALODINE 600 PER
MIL-C-5541

MASS

DO NOT SCALE DRAWING
ENGLISH DRAWING
(UNITS: inches)
INTERPRET PER ANSI Y14.5-1994
WELDING SYMBOLS PER ANSI/AWS A2.4-79

APPROVALS	DATE
DRAWN K. KROMER	4/8/97
CHECKED	
ISSUED	

Space Sciences Laboratory
UNIVERSITY OF CALIFORNIA, BERKELEY, USA

DWG TITLE
RAISED COVER
FUV HVPS

SIZE	PROGRAM	DWG. NO.	REV
B	IMAGE	8042-A4	B

SCALE FULL

SHEET 1 OF 1