[redacted]

#428

SAS-2

A-RATE SUMMARY TAPE

72-091A-01D

Cat. of SAS-B GAMMA-RAY OBS,
72-091A-01F

SAS-B

A-RATE SUMMARY TAPE

72-091A-01D

This data set has been restored. There was originally one 9-track, 1600 BPI tape written in Binary. There is one restored tape. The DR tape is a 3480 cartridge and the DS tape is 9-track, 6250 BPI. The original tape was created on a 360 computer and the restored tape was created on an IBM 9021 computer. The DR and DS numbers along with the corresponding D number are as follows:

DR#	DS#	D#	FILES	TIME SPAN
DR004915	DS004915	D031930	1	11/18/72 - 06/08/73

REQ. AGENT	RAND NO.	ACQ. AGENT
CMP	RD0603	HHM

SAS-2

72-091A-01D

A-RATE SUMMARY TAPE

This data set consists of 1 SAS-2 tape. It is 9 track, 1600 BPI, Binary with 1 file. The tape was created on an IBM 360 computer. The start and stop times (SASDAY) are counted from the year of 1970.

D#	C#	TIME SPAN
D-31930	C-20089	11/18/72 - 06/08/73

NSSDC

Bob Hartman
X-2178

SAS-2 A-RATE SUMMARY TAPE

This tape contains all of the easily available A-rate data from SAS-2. The following two periods are missing because of bad housekeeping encyclopedia tapes for which no backups were made: (SASDAY = Day of 1970)

SASDAY 1084, 15:51:18.439 to DAY 1104, 22:16:52:833

SASDAY 1127, 15:46:08.365 to DAY 1128, 15:07:47.275

It would be a major effort to regenerate those intervals from DECOM tapes, if it could be done at all.

The data are organized as follows:

Tape = 1600 bpi (unlabelled)

Block size = 2304 bytes = 32 logical records

Logical record = 72 bytes = 1 major frame

Each logical record (major frame) contains:

1	4-byte	SASDAY
1	4-byte	millisec of day
64	1-byte	A-rates

The time listed for a major frame is the beginning time for that frame. Each major frame is (nominally) 49.152 seconds long (64 minor frames). Each A-rate accumulation is 768 milliseconds, with the first one in a frame beginning time. The A-rate readout alternates between the two sets of four A-tubes.

The 8-bit (1 byte) A-rate readouts are a prescaled, quasi log representation of the actual counting rates. The attached table gives the conversion, as does an algorithm used in the program AREAD. A zero

rate can mean either that the PM tubes were not turned on, or that the data were not available for some reason.

A negative day number indicates that some type of problem was encountered in reading the housekeeping encyclopedia at that point. A negative millisecond indicates a time backup relative to the previous major frame. It is not known whether either or these situations were actually encountered. Occasionally interference from the SAS-1 satellite produces erroneous rates, including saturated values. The South Atlantic Anomaly produces a count rate increase during one period in each 95-minute orbit. The increase varies from barely perceptible to several hundred thousand counts per readout, depending upon the latitutde of the pass.

The A-rate summary tape was written by program ATAPE (R. C. Hartman, Code 662). Program AREAD (R. C. Hartman) reads selected portions of the tape, converts the 8-bit rate readouts to actual counts, and prints a formatted dump of the results.

SAS-2 A-RATE CONVERSION TABLE

READOUT	TRUE	READOUT	TRUE	READOUT	TRUE	READOUT	TRUE
0	0	64	12288	128	61440	192	258048
1	128	65	12800	129	63488	193	266240
2	256	66	13312	130	65536	194	274432
3	384	67	13824	131	67584	195	282624
4	512	68	14336	132	69632	196	290816
5	640	69	14848	133	71680	197	299008
6	768	70	15360	134	73728	198	307200
7	896	71	15872	135	75776	199	315392
8	1024	72	16384	136	77824	200	323584
9	1152	73	16896	137	79872	201	331776
10	1280	74	17408	138	81920	202	339968
11	1408	75	17920	139	83968	203	348160
12	1536	76	18432	140	86016	204	356352
13	1664	77	18944	141	88064	205	364544
14	1792	78	19456	142	90112	206	372736
15	1920	79	19968	143	92160	207	380928
16	2048	80	20480	144	94208	208	389120
17	2176	81	20992	145	96256	209	397312
18	2304	82	21504	146	98304	210	405504
19	2432	83	22016	147	100352	211	413696
20	2560	84	22528	148	102400	212	421888
21	2688	85	23040	149	104448	213	430080
22	2816	86	23552	150	106496	214	438272
23	2944	87	24064	151	108544	215	446464
24	3072	88	24576	152	110592	216	454656
25	3200	89	25088	153	112640	217	462848
26	3328	90	25600	154	114688	218	471040
27	3456	91	26112	155	116736	219	479232
28	3584	92	26624	156	118784	220	487424
29	3712	93	27136	157	120832	221	495616
30	3840	94	27648	158	122880	222	503808
31	3968	95	28160	159	124928	223	512000
32	4096	96	28672	160	126976	224	520192
33	4352	97	29696	161	131072	225	536576
34	4608	98	30720	162	135168	226	552960
35	4864	99	31744	163	139264	227	569344
36	5120	100	32768	164	143360	228	585728
37	5376	101	33792	165	147456	229	602112
38	5632	102	34816	166	151552	230	618496
39	5888	103	35840	167	155648	231	634880
40	6144	104	36864	168	159744	232	651264
41	6400	105	37888	169	163840	233	667648
42	6656	106	38912	170	167936	234	684032
43	6912	107	39936	171	172032	235	700416
44	7168	108	40960	172	176128	236	716800
45	7424	109	41984	173	180224	237	733184
46	7680	110	43008	174	184320	238	749568
47	7936	111	44032	175	188416	239	765952
48	8192	112	45056	176	192512	240	782336
49	8448	113	46080	177	196608	241	798720
50	8704	114	47104	178	200704	242	815104
51	8960	115	48128	179	204800	243	831488
52	9216	116	49152	180	208896	244	847872
53	9472	117	50176	181	212992	245	864256
54	9728	118	51200	182	217088	246	880640
55	9984	119	52224	183	221184	247	897024
56	10240	120	53248	184	225280	248	913408
57	10496	121	54272	185	229376	249	929792
58	10752	122	55296	186	233472	250	946176
59	11008	123	56320	187	237568	251	962560
60	11264	124	57344	188	241664	252	978944
61	11520	125	58368	189	245760	253	995328
62	11776	126	59392	190	249856	254	1011712
63	12032	127	60416	191	253952	255	1028096

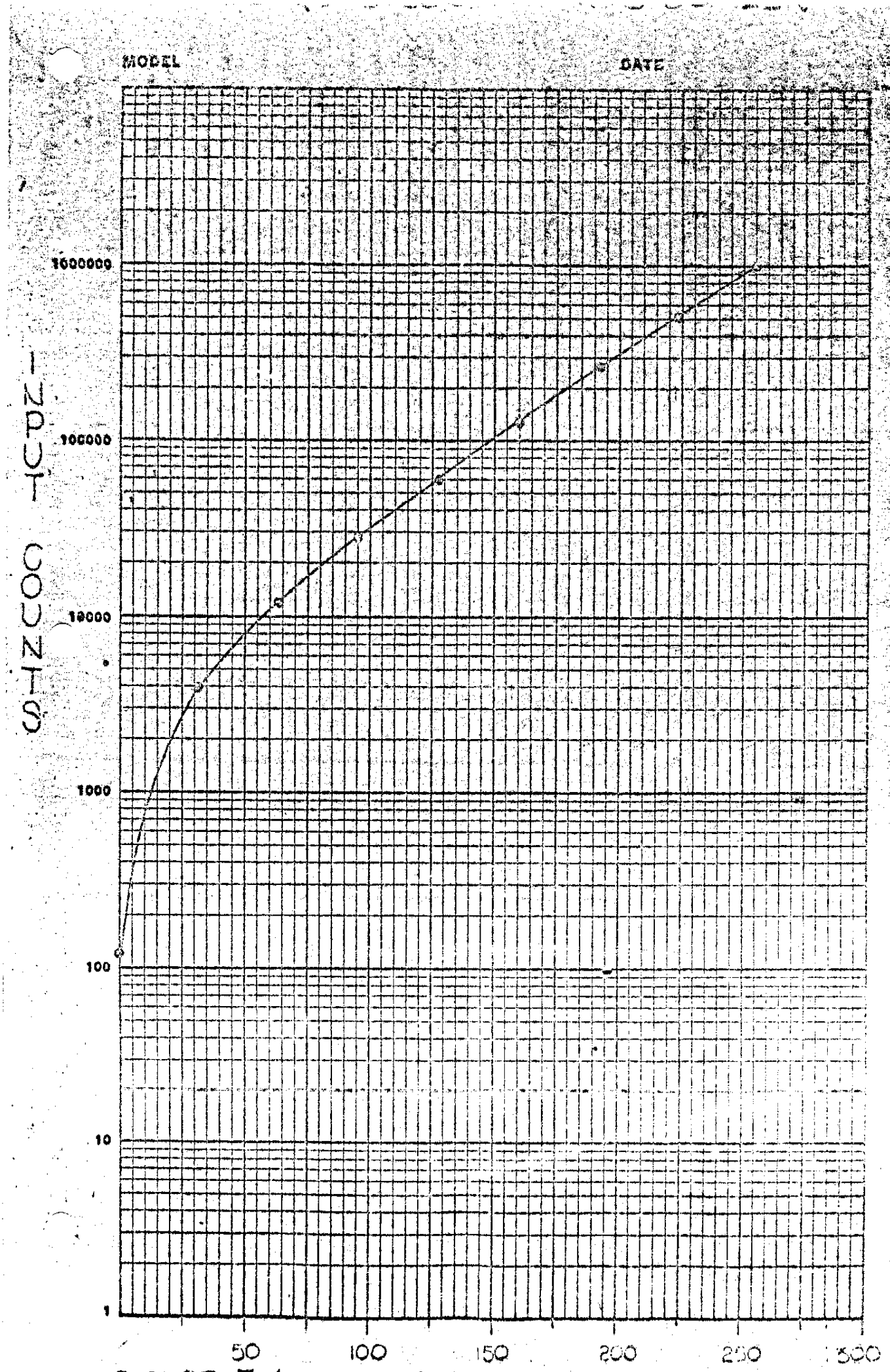

FIGURE 3.4 DECIMAL READOUT

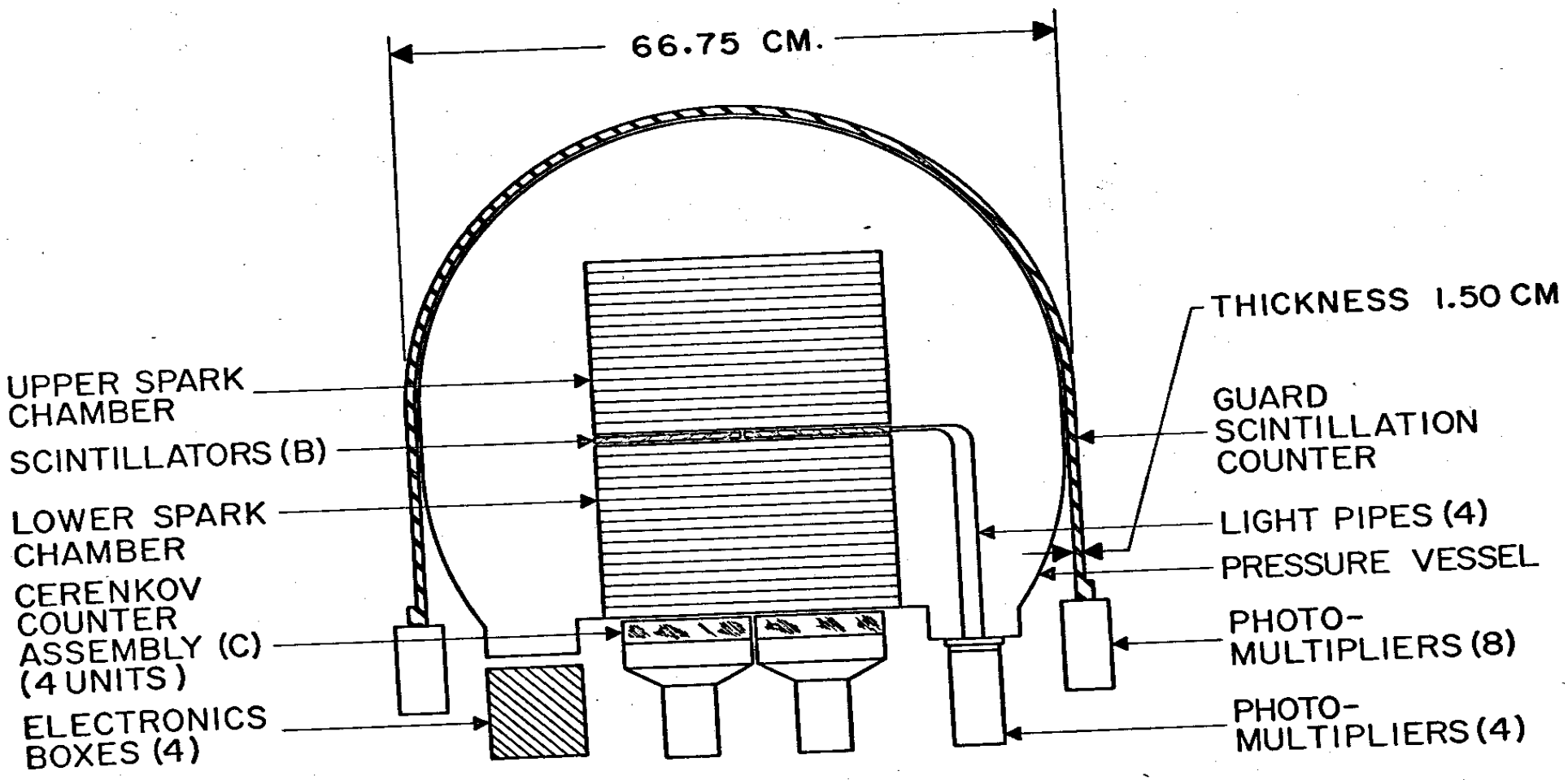

SAS-2 GAMMA RAY EXPERIMENT

D-31930

DUMP OF TAPE ~~X422~~

SAS-2

INPUT TAPE X422 OV MS1
DATA INPUT H9 NF 1 FL 1 B 2 11/18/72 - 6/8/73
1053 - 1255

FILE 1 RECORD 1 LENGTH 2364BYTES

(0)	0000041D	014BE86F	00000000	00000000	00000000	00000000	00000000	00000000	00000000	00000000
(40)	00000000	00000000	00000000	00000000	00000000	00000000	00000000	00000000	0000041D	014CA86F
(80)	00000000	00000000	00000000	00000000	00000000	00000000	00000000	00000000	00000000	00000000
(120)	00000000	00000000	00000000	00000000	00000000	00000000	0000041D	014D686F	00000000	00000000
(160)	00000000	00000000	00000000	00000000	00000000	00000000	00000000	00000000	00000000	00000000
(200)	00000000	00000000	00000000	00000000	0000041D	014E286F	00000000	00000000	00000000	00000000
(240)	00000000	00000000	00000000	00000000	00000000	00000000	00000000	00000000	00000000	00000000
(280)	00000000	00000000	0000041D	014EE86F	00000000	00000000	00000000	00000000	00000000	00000000
(320)	00000000	00000000	00000000	00000000	00000000	00000000	00000000	00000000	00000000	00000000
(360)	0000041D	014FA86F	00000000	00000000	00000000	00000000	00000000	00000000	00000000	00000000
(400)	00000000	00000000	00000000	00000000	00000000	00000000	00000000	00000000	0000041D	0150686F
(440)	00000000	00000000	00000000	00000000	00000000	00000000	00000000	00000000	00000000	00000000
(480)	00000000	00000000	00000000	00000000	00000000	00000000	0000041D	0151286F	00000000	00000000
(520)	00000000	00000000	00000000	00000000	00000000	00000000	00000000	00000000	00000000	00000000
(560)	00000000	00000000	00000000	00000000	0000041D	0151E86F	00000000	00000000	00000000	00000000
(600)	00000000	00000000	00000000	00000000	00000000	00000000	00000000	00000000	00000000	00000000
(640)	00000000	00000000	0000041D	0152A86F	00000000	00000000	00000000	00000000	00000000	00000000
(680)	00000000	00000000	00000000	00000000	00000000	00000000	00000000	00000000	00000000	00000000
(720)	0000041D	0153686F	00000000	00000000	00000000	00000000	00000000	00000000	00000000	00000000
(760)	00000000	00000000	00000000	00000000	00000000	00000000	00000000	00000000	0000041D	0154286F
(800)	00000000	00000000	00000000	00000000	00000000	00000000	00000000	00000000	00000000	00000000
(840)	00000000	00000000	00000000	00000000	00000000	00000000	0000041D	0154E86F	00000000	00000000
(880)	00000000	00000000	00000000	00000000	00000000	00000000	00000000	00000000	00000000	00000000
(920)	00000000	00000000	00000000	00000000	0000041D	0155A86F	00000000	00000000	00000000	00000000
(960)	00000000	00000000	00000000	00000000	00000000	00000000	00000000	00000000	00000000	00000000
(1000)	00000000	00000000	0000041D	0156686F	00000000	00000000	00000000	00000000	00000000	00000000
(1040)	00000000	00000000	00000000	00000000	00000000	00000000	00000000	00000000	00000000	00000000
(1080)	0000041D	01572860	00000000	00000000	00000000	00000000	00000000	00000000	00000000	00000000
(1120)	00000000	00000000	00000000	00000000	00000000	00000000	00000000	00000000	0000041D	0157E86F
(1160)	00000000	00000000	00000000	00000000	00000000	00000000	00000000	00000000	00000000	00000000
(1200)	00000000	00000000	00000000	00000000	00000000	00000000	0000041D	0158A86F	00000000	00000000
(1240)	00000000	00000000	00000000	00000000	00000000	00000000	00000000	00000000	00000000	00000000
(1280)	00000000	00000000	00000000	00000000	0000041D	0159686F	00000000	00000000	00000000	00000000
(1320)	00000000	00000000	00000000	00000000	00000000	00000000	00000000	00000000	00000000	00000000
(1360)	00000000	00000000	0000041D	015A286F	00000000	00000000	00000000	00000000	00000000	00000000
(1400)	00000000	00000000	00000000	00000000	00000000	00000000	00000000	00000000	00000000	00000000
(1440)	0000041D	015AE86F	00000000	00000000	00000000	00000000	00000000	00000000	00000000	00000000
(1480)	00000000	00000000	00000000	00000000	00000000	00000000	00000000	00000000	0000041D	015BA86F
(1520)	00000000	00000000	00000000	00000000	00000000	00000000	00000000	00000000	00000000	00000000
(1560)	00000000	00000000	00000000	00000000	00000000	00000000	0000041D	015C686F	00000000	00000000
(1600)	00000000	00000000	00000000	00000000	00000000	00000000	00000000	00000000	00000000	00000000
(1640)	00000000	00000000	00000000	00000000	0000041D	015D286F	00000000	00000000	00000000	00000000
(1680)	00000000	00000000	00000000	00000000	00000000	00000000	00000000	00000000	00000000	00000000
(1720)	00000000	00000000	0000041D	015DE86D	00000000	00000000	00000000	00000000	00000000	00000000
(1760)	00000000	00000000	00000000	00000000	00000000	00000000	00000000	00000000	00000000	00000000
(1800)	0000041D	015EA86D	00000000	00000000	00000000	00000000	00000000	00000000	00000000	00000000
(1840)	00000000	00000000	00000000	00000000	00000000	00000000	00000000	00000000	0000041D	015F686D
(1880)	00000000	00000000	00000000	00000000	00000000	00000000	00000000	00000000	00000000	00000000
(1920)	00000000	00000000	00000000	00000000	00000000	00000000	0000041D	016028 6D	00000000	00000000
(1960)	00000000	00000000	00000000	00000000	00000000	00000000	00000000	00000000	00000000	00000000
(2000)	00000000	00000000	00000000	00000000	0000041D	016E86D	00000000	00000000	00000000	00000000
(2040)	00000000	00000000	00000000	00000000	00000000	00000000	00000000	00000000	00000000	00000000
(2080)	00000000	00000000	0000041D	0161A86D	00000000	00000000	00000000	00000000	00000000	00000000
(2120)	00000000	00000000	00000000	00000000	00000000	00000000	00000000	00000000	00000000	00000000
(2160)	0000041D	01626 86D	00000000	00000000	00000000	00000000	00000000	00000000	00000000	00000000
(2200)	00000000	00000000	00000000	00000000	00000000	00000000	00000000	00000000	0000041D	0163286D
(2240)	00000000	00000000	00000000	00000000	00000000	00000000	00000000	00000000	00000000	00000000
(2280)	00000000	00000000	00000000	[illegible]	[illegible]	[illegible]				

```
(  400) 2B2F2B2F 2D2F2E31 2D322C30 2E302E31 2E322F34 3C332F37 31363135 31383437 00000407 00192088
(  440) 33373538 33393436 35383338 353A3639 363B373C 373D373E 3B3F383F 38403A40 3B413C41 3B403B40
(  480) 3C423E41 3E433E42 3F434044 3E433F43 40444144 41454244 00000407 00192088 41454345 43464346
(  520) 42474347 44474347 44484548 45464549 45494549 464A464A 4649484A 474A484C 494C474B 494C4A4C
(  560) 494C4A4D 4A4C4B4F 4A4E4B4F 4B4E4B4E 00000407 001AA087 4C4F4C50 4D504D4F 4C504D50 4C514D51
(  600) 4D504E52 4E514E51 4D524E51 4F544F52 4F534F53 50535053 50535153 50535256 51545354 50545254
(  640) 51565156 52555256 00000407 00186087 51545154 52545256 52555256 52565357 52565257 51565157
(  680) 53575258 52565257 52565257 51565356 52575257 53585256 51575257 52575256 52585258 53575257
(  720) 00000407 001C2087 52575257 52575257 52565256 52575156 51565157 51575157 52565155 51565156
(  760) 52565055 50565055 51555054 50555054 50555054 4F544F53 50534E54 4E534F53 00000407 001CE087
(  800) 4E544E52 4E524D53 4F514E51 4D524D51 4C504B50 4D504C50 4C504B50 4B4F4A4E 4B4E4A4F 494E4A4D
(  840) 4A4D4A4F 494D494D 484C484D 484C484B 474A4849 474A474A 00000407 001DA087 464A464C 46494643
(  880) 45494448 44474446 43474346 43464246 42464145 42464144 41444144 40444143 40423F43 3E423E41
(  920) 3E423F41 3D413C41 3B403A40 3C3E3A3D 00000407 001E6087 3A3C393D 383E383B 393C3739 363B353A
(  960) 37383439 34373338 32373236 34353233 31343234 2F333032 30302D30 2D312E30 2D3C2E2F 2C2F2C2F
( 1000) 2B2E2B2D 2A2C2A2D
```

FILE	INPUT RECS.	DATA RECORDS INPUT	MAX. SIZE	READ ERROR SUMMARY PERM	ZERO B	SHORT	UNDEF.	INPUT RETRIES #RECS.	TOTAL#
1	8691	8693	2304	0	59	0	0	337	359

EOJ DUMP STOPPED AFTER FILE 1 # OF PERMANENT READ ERRORS 0

START TIME 08/25/78 09:20:20 STOP TIME 08/25/78 09:24:04

```
$$
REG(AF84) 4B58 31EA 0936 0945 0000 0000 000F 0882 BC0B 51B2 51C7 8156 5420 8C0C 80CC 0080
BOD(0000) 0000 0000 8001 6874 4120 2020 2020 0000 0100 0000 0000 0000 8001 6932 4120 2020 /ZORCH /
```

REQ. AGENT	RAND NO.	ACQ. AGENT
JLJ		HKH

SAS-B

72-091A-01F

CAT OF SAS-2 GAMMA-RAY OBS. #7130

This data set consists of 1 SAS-2 tape. It is a 9 track, 6250 bpi, EBCDIC. The tape was created on a 3081 computer system.

D#	C#	FILES
D-82227	C-27831	5

```
TAPESCAN 4.4  TAPE ANALYSIS AND COPYING PROGRAM          09/04/90   13:45:01.6   INPUT VOL=JJ0008   (LAST MOD-2 ..T88)    PAGE  1
OPTIONS IN EFFECT: LIST004

Fairall 9     S   1.333  -59.1   1.8E-06   2.0E-06   6.1E+453C 120        S   1.500  + 5.3   2.4E-06   1.7E-06   2.7E+45Akn 120
C8898994F44444E444F4FFF446FF4F444F4FC6FF444F4FC6FF444F4FC4FFFC4FFF44444444E444F4FFF4444F4F444F4FC6FF444F4FC6FF444F4FC4FFC994FFF44444
6199133090000020001B33300059B10001B850060002B050060006B15E45330120000000020001B50000E05B30002B450060001B750060002B75E45125012000000

TAPEMARK NO 0001                  BLOCK LENGTHS:  MIN=01920  MAX=01920  AVG=01920    NUMBER OF BLOCKS=000001

0105+65  1.284      12.4    1.0    1.8  37.20  1  0136+57  0.2724     10.687  2.50   2.2  38.1   2  0138+59  1.223        0.2    3.0
FFFF4FF44F4FFF444444FF4F4444F4F4444F4F44FF4FF44F44FFFF4FF44F4FFFF44444FF4FFF44F4FF444F4F44FF4F444F44FFFF4FF44F4FFF4444444F4F4444F4F4
0105E65001B28400000012B400001B000001B80037B20001000136E57000B27240000010B687002B500002B20038B10002000138E59001B22300000000B200003B00

TAPEMARK NO 0002                  BLOCK LENGTHS:  MIN=05650  MAX=05650  AVG=05650    NUMBER OF BLOCKS=000001

                         SAS-2 Pulsars                                                          Notes and References
44444444444444444444444ECE6F4DA9A89A44444444444444444444444444444444444444444444444444444444444D9A8A48984D88898988A444444444444444
00000000000000000000000021202074321920000000000000000000000000000000000000000000000000000000000000000000000000000000000000000000
TAPEMARK NO 0003                  BLOCK LENGTHS:  MIN=01216  MAX=01216  AVG=01216    NUMBER OF BLOCKS=000001

                       SAS-2 Other Sources
44444444444444444444444ECE6F4DA8894E9A988A44444444444444444444444444444444444444444444444444444444444444444444444444444444444444444
00000000000000000000000212020638590264935200000000000000000000000000000000000000000000000000000000000000000000000000000000000000000
TAPEMARK NO 0004                  BLOCK LENGTHS:  MIN=02850  MAX=02850  AVG=02850    NUMBER OF BLOCKS=000001

                       SAS-2 Other Sources                                                  Notes and references
44444444444444444444444ECE6F4DA8894E9A988A44444444444444444444444444444444444444444444444444444D9A8A48984988898988A444444444444444444444
00000000000000000000000212020638590264935200000000000000000000000000000000000000000000000000000000000000000000000000000000000000000
TAPEMARK NO 0005                  BLOCK LENGTHS:  MIN=01050  MAX=01050  AVG=01050    NUMBER OF BLOCKS=000001

TAPEMARK NO 0006 -- EOV NO 001

TRUE DENSITY AT END OF PROCESSING:  DEN=4

LENGTH ESTIMATE=0002 FEET 02 INCHES FOR DEN=4 AND TRTCH=STANDARD

(LENGTH ESTIMATE USUALLY ACCURATE WITHIN PLUS OR MINUS TEN PERCENT;  ALMOST ALWAYS WITHIN TWENTY PERCENT)

PROCESSING OF THIS TAPE COMPLETED:    TOTAL BYTES READ=0000012686    NUMBER OF DATA BLOCKS READ=000005
```

72-091A-01F

A S T R O N O M I C A L D A T A C E N T E R

MAGNETIC TAPE FILE RECORD

Name: Ralph Post ; Date: 4 SEP 1990; Density: 6250 bpi; Coding: EBCDIC; Tracks: 9

Catalog Number	File	Catalog Name	File Name	Tape File	Number of Blocks	BLOCKSIZE Max	BLOCKSIZE Min	Blocking Factor	RECFM	LRECL	Number of Records	Length (feet)
7130	1	SAS-2 Gamma-Ray Obs (Fichtel et al. 1990)	Galaxy Data	1	1	1920	1920	32	FB	60	32 ✓	0
7130	2	SAS-2 Gamma-Ray Obs (Fichtel et al. 1990)	Pulsar Data	2	1	5650	5650	113	FB	50	113 ✓	0
7130	3	SAS-2 Gamma-Ray Obs (Fichtel et al. 1990)	Pulsar Notes	3	1	1216	1216	16	FB	76	16 ✓	0
7130	4	SAS-2 Gamma-Ray Obs (Fichtel et al. 1990)	Other Sources	4	1	2850	2850	38	FB	75	38 ✓	0
7130	5	SAS-2 Gamma-Ray Obs (Fichtel et al. 1990)	Other Notes	5	1	1050	1050	15	FB	70	15 ✓	0
Totals: Number of Catalogs: 1				5 ✓								0

DEFINITIONS OF TAPE PARAMETERS:

LRECL: The logical record length in bytes; usually the length required to accommodate the data for a single object.

BLOCKSIZE: Physical record length. The maximum block size is BLOCKSIZE, but in most cases there is a short block at the end of a file, since the total number of logical records is usually not evenly divisible into an even number of blocks.

BLOCKING FACTOR: The number of logical records per physical record (BLOCKSIZE / LRECL).

NUMBER OF BLOCKS: Total number of blocks (physical records) in the file, including the short block (if present).

RECFM: The physical record format (FB = fixed length records; VB = variable length physical records, possibly due to variable length logical records; VBS = variable blocking with spanned records from block to block to eliminate record padding and to condense data storage. For tapes having variable length blocks, the minimum BLOCKSIZE in the table should be ignored, since this parameter cannot be computed in a straightforward way. If a file also has variable length logical records, the LRECL given is the longest in the file. The length is only a very rough estimate in this case, since in V-type formats each record and each block include binary control words containing length and spanning information.

LENGTH: The approximate amount of tape used, rounded to the nearest foot (should be accurate to ±10% for FB tapes).

72-014-01F

NSSDC
WDC-A-R&S

National Space Science Data Center/
World Data Center A For Rockets and Satellites

90-20

CATALOG OF SAS-2 GAMMA-RAY OBSERVATIONS

(Fichtel *et al.* 1990)

Documentation for the Machine Readable Version

July 1990

NSSDC/WDC-A-R&S 90-20

CATALOG OF SAS-2 GAMMA-RAY OBSERVATIONS

(Fichtel *et al.* 1990)

Documentation for the Machine-Readable Version

Wayne H. Warren Jr.

July 1990

National Space Science Data Center (NSSDC)/
World Data Center A for Rockets and Satellites (WDC-A-R&S)
National Aeronautics and Space Administration
Goddard Space Flight Center
Greenbelt, Maryland 20771

Abstract

The machine-readable version of the catalog, as it is currently being distributed from the Astronomical Data Center, is described. The SAS-2 γ-ray catalog contains fluxes measured with the high-energy γ-ray telescope flown aboard the second NASA *Small Astronomy Satellite*. The objects measured include various types of galaxies, quasi-stellar and BL Lacertae objects, and pulsars. The catalog contains separate files for galaxies, pulsars, other objects, notes, and references.

Table of Contents

1.0 Introduction 1
1.1 Description 1
1.2 Primary Source References 1

2.0 Structure 3
2.1 File Summary 3
2.2 Galaxy Data (File 1 of 5) 3
2.3 Pulsar Data (File 2 of 5) 4
2.4 Pulsar Notes and References (File 3 of 5) 6
2.5 Data for Other Sources (File 4 of 5) 6
2.6 Other Notes and References (File 5 of 5) 6

3.0 History 7
3.1 Remarks 7
3.2 Acknowledgments 7
3.3 References 7

Appendix A. Sample Listing 9

List of Tables

Table 1. Summary Description of Catalog Files 3
Table 2. Galaxy File Record Format 4
Table 3. Pulsar File Record Format 5
Table 4. Pulsar Notes File Record Format 6
Table 5. Other Data File Record Format 6
Table 6. Other Notes File Record Format 6

1.0 Introduction

1.1 Description

The *Catalog of SAS-2 Gamma-Ray Observations* summarizes final results for high-energy γ-ray observations obtained wth the second *Small Astronomy Satellite* (SAS-2) flown in an equatorial orbit by NASA from 1972 November through 1973 June. The data from the SAS-2 γ-ray experiment cover about 60 percent of the sky and 89 percent of the galactic plane for γ rays with energies > 35 MeV.

The experiment (also see Derdeyn *et al.* 1972) was a picture-type high-energy (> 35 MeV) γ-ray telescope using a 32-level wire-grid, magnetic-core spark chamber assembly covered by an anticoincidence scintillator and triggered by any one of four independent directional scintillator Cerenkov counter telescopes in anticoincidence with the outer scintillator. Thin tungsten (W) plates, 0.03 of a radiation length thick, were interleaved between the spark-chamber modules, which had an active area of approximately 640 cm^2. The large number of W plates and spark chambers served the dual purpose of providing material for the γ rays to be converted to electron pairs that could then be clearly identified and from which their arrival directions could be determined; plus, they provided a means of ascertaining the energies of the electrons in a pair by measuring their Coulomb scattering. The full width at half-maximum field of view (FOV) was 35°, and within the FOV the average angular uncertainty for determining the arrival direction of an individual γ ray projected on one plane was about 2°.6 at 100 MeV and varied with energy approximately as $E^{-1/2}$ in the energy range 35-200 MeV. For descriptions of the instrument calibration, data analysis procedures, and in-flight performance checks, see Fichtel *et al.* (1975) and Hartman *et al.* (1979).

This document describes the machine-readable version of the *Catalog of SAS-2 Gamma-Ray Observations* as it is currently being distributed from the National Space Science Data Center (NSSDC), its Astronomical Data Center (ADC), and the international network of astronomical data centers. It is intended to enable users to read and process the computerized catalog without problems and guesswork, and it should be used only to supplement the information contained in the published papers. In addition to the primary source references given below, those papers include Lamb *et al.* (1977), Thompson *et al.* (1977*a*, 1977*b*, 1983), and Fichtel, Thompson, and Lamb (1987). Since some of the data in the machine-readable files do not correspond exactly with those in the various published tables, users of the machine version are encouraged to study the format descriptions given in the following sections of this document before using and interpreting the data. **A copy of this document should be transmitted to any recipient of the machine-readable catalog originating from the any of the international network of astronomical data centers.**

1.2 Primary Source References

Bignami, G. F., Fichtel, C. E., Hartman, R. C., and Thompson, D. J. 1979, *Astrophys. J.* **232**, 649-658.

Fichtel, C. E., Hartman, R. C., Hunter, S. D., Kniffen, D. A., Thompson, D. J., Ögelman, H. B., Tümer, T., and Özel, M. E. 1990, *Catalog of SAS-2 Gamma-Ray Observations*, Laboratory for High Energy Astrophysics, NASA Goddard Space Flight Center.

Fichtel, C. E., Hartman, R. C., Kniffen, D. A., Thompson, D. J., Bignami, G. F., Ögelman, H., Özel, M. E., and Tümer, T. 1975, *Astrophys. J.* **198**, 163-182.

Ögelman, H., Fichtel, C. E., Kniffen, D. A., and Thompson, D. J. 1976, *Astrophys. J.* **209**, 584-591.

NASA
National Aeronautics and
Space Administration

Goddard Space Flight Center
Greenbelt, Maryland 20771

2.0 Structure

2.1 *File Summary*

The machine version of the *Catalog of SAS-2 Gamma-Ray Observations* consists of five files. Table 1 gives the machine-independent file attributes. All logical records are of fixed length. (Since all files are short, each will consist of a single block of differing length if blocked data are supplied on magnetic tape.)

Catalog of SAS-2 Gamma-Ray Observations (Fichtel *et al.* 1990)				
File	Contents	Record Format	Logical Record Length	Total Number of Logical Records
1	Galaxy Data	FB	60	32
2	Pulsar Data	FB	50	113
3	Pulsar Notes	FB	76	16
4	Other Sources	FB	75	38
5	Other Notes	FB	70	15

Table 1. Summary Description of Catalog Files: FB = Fixed length blocks

The information contained in the above table is sufficient for a user to describe the indigenous characteristics of the machine-readable version of the *Catalog of SAS-2 Gamma-Ray Observations* to a computer. Information easily varied from installation to installation, such as block size (physical record length), blocking factor (number of logical records per physical record), total number of blocks, density, number of tracks and character coding (ASCII, EBCDIC) for tapes, is not included, but should always accompany secondary copies if any are supplied to other users or installations.

2.2 *Galaxy Data (File 1 of 5)*

This file is uniformly formatted and contains the SAS-2 observations of various types of galaxies, as published in Bignami *et al.* (1979). Some of the data and other information presented in Table 1 of the published paper are not included in the machine-readable file; hence, the former should be consulted when using the latter.

Table 2 gives a byte-by-byte description of the contents of the galaxy file. A suggested Fortran format specification for reading each data field is included and can be modified depending upon individual programming and processing requirements (Fortran 77 character string-type formats are used). Certain data fields are blank when data are absent and these are indicated by the default values in the table.

Byte(s)	Units	Suggested Format	Default Value	Data
1-13	---	A13	---	Object designation
14	---	1X	---	Blank
15	---	A1	---	Object type
16-17	---	2X	---	Blank
18-23	hours	F6.3	---	Right ascension
24-25	---	2X	---	Blank
26-30	°	F5.1	---	Declination
31-32	---	2X	---	Blank
33-40	*	E8.1	blank	35-100 MeV emission limit
41-42	---	2X	---	Blank
43-50	**	E8.1	---	> 100 MeV emission limit
51-52	---	2X	---	Blank
53-60	$ergs^{-1}$	E8.1	blank	Luminosity limit

Table 2. Galaxy File Record Format

* Units are keV cm^{-2} s^{-1} keV^{-1}

** Units are photons cm^{-2} s^{-1}

Object designation Common name or abbreviation for the observed object.

Object type A letter code that designates the following types:

S Seyfert galaxy

N N-type galaxy

B BL Lacertae object

Q Quasi-stellar object

E Sharp emission-line galaxy

O Other type of galaxy

Equatorial coordinates Decimal hours and degrees for equinox B1950.0.

Energy Upper limits in the 35-100 MeV and > 100 MeV energy ranges, as determined by using the diffuse γ-ray emission level based on the analysis of Fichtel, Simpson, and Thompson (1978). These are 95% confidence upper limits calaculated using the statistical analysis techniques of Hearn (1969), equations (12) and (13).

Luminosity limit The 95% confidence upper limit to the γ-ray luminosity for E > 100 MeV.

2.3 *Pulsar Data (File 2 of 5)*

The file is uniformly formatted and contains observations of pulsars published by Ögelman *et al.* (1976) and Thompson *et al.* (1977*a*, 1977*b*, 1983). The machine-readable file differs somewhat from the published tables in that estimated distances are given in kiloparsecs and γ-ray luminosity limits are in logarithmic form; the published χ^2 data are not present in the machine version.

Table 3 provides a description of the pulsar file. All data fields in this file contain valid data; *i.e.*, there are no blank fields and no default vales are reported.

Byte(s)	Units	Suggested Format	Default Value	Data
1-7	---	A7	---	Pulsar designation
8-9	---	2X	---	Blank
10-15	s	F6.4	---	Period
16-17	---	2X	---	Blank
18-26	10^{-15} s s^{-1}	F9.3	---	Period change
27	---	1X	---	Blank
28-32	kpc	F5.2	---	Distance
33-34	---	2X	---	Blank
35-38	*	F4.1	---	Pulsed flux limit
39-40	---	2X	---	Blank
41-45	**	F5.2	---	Luminosity limit
46-47	---	2X	---	Blank
48-50	---	A3	---	Notes and references

Table 3. Pulsar File Record Format

* Units are 10^{-6} cm^{-2} s^{-1}

** Units are photons s^{-1}

Pulsar designation Standard pulsar coordinate designation (PSR) in hours and minutes of right ascension and degrees of declination.

Period The pulsar period

Period change Derivative of the period, which is the rate of pulsar spin up or spin down, in units of 10^{-15} s s^{-1}.

Distance The approximate distance of the object, as taken from Taylor and Manchester (1975).

Pulsed flux limit The 2σ upper limit of the pulsed γ-ray flux above 35 MeV in units of 10^{-6} cm^{-2} s^{-1}. For most of the pulsars, this limit was calculated based on the highest single peak in the pulsar phase plot (see Ögelman *et al.* 1976 for details).

Luminosity limit Upper limit to the γ-ray luminosity, as determined from the upper limit to the flux and the distance estimates of Taylor and Manchester (1975). An emission solid angle of 1 steradian was assumed; the luminosity was calculated as:

$$L = 1 \cdot Fd^2,$$

where F is the observed flux and d is the distance. Note that these upper limits do not truly reflect actual upper limits in the sense that neither the distance nor the emission solid angle is accurately known for any pulsar.

Notes and references Numerical key(s) to the notes and references given in file 3 of the catalog.

2.4 *Pulsar Notes and References (File 3 of 5)*

This file is a simple text file containing notes and references concerning individual pulsars contained in file 2. The information is keyed by the numbers given in the last column of the data file (bytes 48-50).

Byte(s)	Fortran Format	Data
1-76	A76	Mixed case text

Table 4. Pulsar Notes File Record Format

2.5 *Data for Other Sources (File 4 of 5)*

This file contains data for miscellaneous other sources, such as supernova remnants, X-ray and binary X-ray, and miscellaneous sources. The data come from the papers of Fichtel *et al.* (1975), Thompson *et al.* (1977*a*), and Fichtel, Thompson, and Lamb (1987). The file has not been uniformly formatted because of the inhomogeneity of the information given; thus, it is a simple text file with column headings.

Byte(s)	Fortran Format	Data
1-75	A75	Other data in free form

Table 5. Other Data File Record Format

2.6 *Other Notes and References (File 5 of 5)*

This text file contains definitions of source types, notes, and references associated with the other sources data file. The notes and references are keyed by numbers given in the data file.

Byte(s)	Fortran Format	Data
1-70	A70	Mixed case text

Table 6. Other Notes File Record Format

3.0 History

3.1 Remarks

The machine-readable galaxies and pulsars data files of the *Catalog of SAS-2 Gamma-Ray Observations* were initially produced at the Astronomical Data Center from published papers supplied by Drs. Carl E. Fichtel and David L. Bertsch of the Laboratory for High Energy Astrophysics (LHEA) at the NASA Goddard Space Flight Center (GSFC), following a meeting with them in April 1988 that was arranged by Dr. J. M. Mead of GSFC. The newly created files were supplied to Dr. Stanley D. Hunter, also of the LHEA, who updated and added data to the existing files as well as creating the files for other sources. Further modifications were made in consultation with the above-mentioned authors.

3.2 Acknowledgments

Appreciation is expressed to Drs. Fichtel, Bertsch, and Hunter for their help with the design of the catalog and consultation during its preparation. Dr. Hunter kindly assembled and supplied reprints and photocopies of all the relevant published papers.

3.3 References

Bignami, G. F., Fichtel, C. E., Hartman, R. C., and Thompson, D. J. 1979, *Astrophys. J.* **232**, 649-658.

Derdeyn, S. M., Ehrmann, C. H., Fichtel, C. E., Kniffen, D. A., and Ross, R. W. 1972, *Nuclear Instrum. & Meth.* **98**, 557-566.

Fichtel, C. E., Hartman, R. C., Hunter, S. D., Kniffen, D. A., Thompson, D. J., Ögelman, H. B., Tümer, T., and Özel, M. E. 1990, *Catalog of SAS-2 Gamma-Ray Observations*, Laboratory for High Energy Astrophysics, NASA Goddard Space Flight Center.

Fichtel, C. E., Hartman, R. C., Kniffen, D. A., Thompson, D. J., Bignami, G. F., Ögelman, H., Özel, M. E., and Tümer, T. 1975, *Astrophys. J.* **198**, 163-182.

Fichtel, C. E., Simpson, G. A., and Thompson, D. J. 1978, *Astrophys. J.* **222**, 833-849.

Fichtel, C. E., Thompson, D. J., and Lamb, R. C. 1987, *Astrophys. J.* **319**, 362-366.

Hearn, D. 1969, *Nuclear Instrum. & Methods* **70**, 200-204.

Lamb, R. C., Fichtel, C. E., Hartman, R. C., Kniffen, D. A., and Thompson, D. J. 1977, *Astrophys. J. (Letters)* **212**, L63-L66.

Ögelman, H., Fichtel, C. E., Kniffen, D. A., and Thompson, D. J. 1976, *Astrophys. J.* **209**, 584-591.

Taylor, J. H. and Manchester, R. N. 1975, *Astron. J.* **80**, 794-806.

Thompson, D. J., Bertsch, D. L., Hartman, R. C., and Hunter, S. D. 1983, *Astron. Astrophys.* **127**, 220-223.

Thompson, D. J., Fichtel, C. E., Hartman, R. C., Kniffen, D. A., and Lamb, R. C. 1977*a*, *Astrophys. J.* **213**, 252-262.

Thompson, D. J., Fichtel, C. E., Kniffen, D. A., and Ögelman, H. B. 1977 *b*, *Astrophys. J. (Letters)* **200**, L17-L18.

Appendix A. Sample Listing

The sample listing given on the following pages shows logical records exactly as they are recorded in the machine-readable version of the catalog. Groups of records from the beginning and end of each file are illustrated, except where the files are very short, in which case an entire file may be shown. The beginning of each record and the bytes within the record are indicated by the column heading index across the top of each page (digits read vertically).

L I S T I N G O F R E C O R D S F R O M D A T A F I L E

Data File Name: SAS-2 Galaxy Data
Records 1 to 20
Data File 226
Record Length 60 bytes
Input VOLSER ADC007

```
COLUMN NO.
HEADING
INDEX          1111111111222222222233333333334444444444555555555566666666667777777777888888888899999
          123456789012345678901234567890123456789012345678901234567890123456789012345678901234567890123
```

Record	1	Fairall 9	S	1.333	-59.1	1.8E-06	2.0E-06	6.1E+45
Record	2	3C 120	S	1.500	+ 5.3	2.4E-06	1.7E-06	2.7E+45
Record	3	Akn 120	S	5.233	- 0.2	1.8E-06	1.5E-06	2.3E+45
Record	4	MCG+08-11-011	S	5.303	+46.6	1.4E-06	1.9E-06	1.1E+45
Record	5	NGC 3227	S	10.350	+20.1	1.6E-06	8.9E-07	1.4E+43
Record	6	NGC 3783	S	11.617	-37.5	10.8E-06	3.1E-06	3.7E+44
Record	7	NGC 4051	S	12.000	+44.8	2.3E-06	1.9E-06	1.5E+43
Record	8	NGC 4151	S	12.133	+39.7	2.9E-06	7.3E-07	1.1E+43
Record	9	IC 4329 A	S	13.767	-30.0	2.1E-06	1.2E-06	3.3E+44
Record	10	MKN 279	S	13.867	+69.6	2.2E-06	1.2E-06	1.6E+44
Record	11	NGC 5548	S	14.250	+25.5	2.2E-06	1.4E-06	5.6E+44
Record	12	NGC 6814	S	19.667	-10.4	6.3E-06	1.3E-06	5.2E+43
Record	13	MKN 509	S	20.700	-10.9	3.0E-06	2.1E-06	3.8E+45
Record	14	3C 111	N	4.250	+37.9	5.4E-06	1.7E-06	5.7E+45
Record	15	3C 382	N	18.550	+30.4	7.5E-06	8.2E-07	4.0E+45
Record	16	3C 445	N	20.350	- 2.3	3.7E-06	2.0E-06	9.2E+45
Record	17	PKS 0548-322	B	5.800	-32.2	7.0E-06	2.9E-06	2.0E+46
Record	18	MKN 421	B	11.017	+38.4	3.5E-06	7.8E-07	1.1E+45
Record	19	MKN 501	B	16.867	+39.8	7.4E-06	4.1E-06	6.8E+45
Record	20	BL Lac	B	22.000	+42.0	2.3E-06	2.0E-06	1.3E+46

L I S T I N G O F R E C O R D S F R O M D A T A F I L E

Data File Name: SAS-2 Galaxy Data
Records 13 to 32
Data File 226
Record Length 60 bytes
Input VOLSER ADC007

```
C O L U M N
H E A D I N G          1111111111222222222233333333334444444444555555555566666666667777777777888888888899999
I N D E X      123456789012345678901234567890123456789012345678901234567890123456789012345678901234567890123
```

Record	13	MKN 509	S	20.700	-10.9	3.0E-06	2.1E-06	3.8E+45
Record	14	3C 111	N	4.250	+37.9	5.4E-06	1.7E-06	5.7E+45
Record	15	3C 382	N	18.550	+30.4	7.5E-06	8.2E-07	4.0E+45
Record	16	3C 445	N	20.350	- 2.3	3.7E-06	2.0E-06	9.2E+45
Record	17	PKS 0548-322	B	5.800	-32.2	7.0E-06	2.9E-06	2.0E+46
Record	18	MKN 421	B	11.017	+38.4	3.5E-06	7.8E-07	1.1E+45
Record	19	MKN 501	B	16.867	+39.8	7.4E-06	4.1E-06	6.8E+45
Record	20	BL Lac	B	22.000	+42.0	2.3E-06	2.0E-06	1.3E+46
Record	21	4U 0241+61	Q	2.683	+62.3	2.1E-06	3.5E-06	9.7E+45
Record	22	3C 273	Q	12.450	+ 2.2	2.8E-06	1.6E-06	5.7E+46
Record	23	NGC 2110	E	5.833	- 7.5	5.3E-06	2.2E-06	1.6E+44
Record	24	NGC 2992	E	9.717	-14.1	2.3E-06	5.3E-07	4.0E+43
Record	25	A 0945-30	E	9.750	-30.7	2.8E-06	1.4E-06	1.4E+44
Record	26	NGC 3034(M82)	E	9.983	+70.0	9.7E-06	5.0E-06	3.5E+42
Record	27	NGC 5506	E	14.167	- 2.9	2.7E-06	1.5E-06	7.2E+43
Record	28	M 31	O	0.683	+41.0		1.4E-06	
Record	29	SMC	O	0.917	-72.0		1.0E-06	
Record	30	LMC	O	5.333	-69.5		2.4E-06	
Record	31	M 87	O	12.467	+12.7	1.1E-06	6.4E-07	1.5E+43
Record	32	Cen A	O	13.367	-42.7	6.4E-06	2.0E-06	2.9E+42

L I S T I N G O F R E C O R D S F R O M D A T A F I L E

Data File Name: SAS-2 Pulsar Data

Records 1 to 20

Data File 227

Record Length 50 bytes

Input VOLSER ADC007

```
C O L U M N
H E A D I N G          11111111112222222222333333333344444444445555555555666666666677777777778888888888999
I N D E X      12345678901234567890123456789012345678901234567890123456789012345678901234567890123456789012
```

Record	1	0105+65	1.284	12.4	1.0	1.8	37.20	1
Record	2	0136+57	0.2724	10.687	2.50	2.2	38.1	2
Record	3	0138+59	1.223	0.2	3.0	1.6	38.11	1
Record	4	0154+61	2.3517	188.990	1.60	2.6	37.8	2,3
Record	5	0450-18	0.549	5.78	2.4	0.6	37.49	1
Record	6	0525+21	3.745	40.06	1.9	1.2	37.59	2
Record	7	0531+21	0.0331	442.439	2.0	3.7	38.34	9
Record	8	0540+23	0.246	15.43	2.8	1.0	37.85	1
Record	9	0611+22	0.335	59.73	3.5	1.2	38.11	1
Record	10	0628-28	1.244	2.51	1.4	1.1	37.28	1
Record	11	0656+14	0.3849	1.600	0.40	3.6	36.7	2
Record	12	0727-18	0.5102	18.948	1.50	1.4	37.5	2
Record	13	0740-28	0.1668	16.832	1.50	1.0	37.3	2,3
Record	14	0743-53	0.2148	2.730	2.40	4.0	38.5	2
Record	15	0818-13	1.238	2.11	1.6	1.0	37.36	1
Record	16	0833-45	0.0892	124.687	0.50	29.5	37.67	10
Record	17	0834+06	1.274	6.80	0.48	1.3	36.43	1
Record	18	0919+06	0.4306	13.725	1.00	1.4	37.1	2
Record	19	0922-52	0.7463	35.477	2.70	2.5	38.2	2
Record	20	0940-55	0.6644	22.739	4.90	3.0	38.8	2

L I S T I N G O F R E C O R D S F R O M D A T A F I L E

Data File Name: SAS-2 Pulsar Data

Records 94 to 113

Data File 227

Record Length 50 bytes

Input VOLSER ADC007

```
C O L U M N
H E A D I N G          11111111112222222222333333333344444444445555555555666666666677777777778888888888999
I N D E X      12345678901234567890123456789012345678901234567890123456789012345678901234567890123456789012345678901234567890123
```

Record	94	1944+17	0.441	0.024	0.55	1.6	36.64	1
Record	95	1946+35	0.717	7.05	5.4	2.1	38.74	1
Record	96	1951+32	0.039	5.9	2.0	3.7	38.15	11
Record	97	1952+29	0.427	0.003	0.67	1.6	36.81	1
Record	98	2002+31	2.111	74.58	7.8	2.0	39.04	1
Record	99	2016+28	0.558	0.15	0.48	1.8	36.57	1
Record	100	2020+28	0.343	1.90	2.0	2.0	37.86	1
Record	101	2021+51	0.529	3.04	0.8	1.7	36.99	1
Record	102	2045-16	1.962	10.97	0.43	1.5	36.40	1
Record	103	2106+44	0.415	0.1	0.78	1.7	36.97	1
Record	104	2111+46	1.015	0.72	4.0	1.5	38.34	1
Record	105	2148+63	0.380	0.16	0.84	1.7	37.04	1
Record	106	2154+40	1.525	2.9	3.2	1.6	38.18	1
Record	107	2217+47	0.538	2.76	1.6	1.0	37.36	1
Record	108	2223+65	0.683	9.5	0.73	1.2	36.76	1
Record	109	2255+58	0.368	5.75	2.1	1.4	37.75	1
Record	110	2305+55	0.475	0.1	1.6	1.0	37.36	1
Record	111	2319+60	2.256	7.6	2.5	1.4	37.90	1
Record	112	2324+60	0.234	0.36	0.76	1.5	36.89	1
Record	113	2351+61	0.9448	16.226	2.50	1.5	38.0	2

L I S T I N G O F R E C O R D S F R O M D A T A F I L E

Data File Name: SAS-2 Pulsar Notes

Records 1 to 16

Data File 228

Record Length 76 bytes

Input VOLSER ADC007

```
C O L U M N
H E A D I N G        1111111111222222222233333333334444444444555555555566666666667777777777888888888889999
I N D E X        12345678901234567890123456789012345678901234567890123456789012345678901234567890123
```

Record 1 SAS-2 Pulsars

Record 2 Notes and References

Record 3

Record 4 1. Ogelman, H.B., et al. Astrophys. J. 209, 584, (1976).

Record 5 2. Thompson, D.J, et al., Astron. Astrophys. 127, 220, (1983).

Record 6 3. Also appears on list of Ogelman et al., updated parameters.

Record 7 4. Distance uncertainty relatively large.

Record 8 5. Based on 10 bin phase plot.

Record 9 6. Upper limit based on search of periods around the nominal value.

Record 10 7. Binary pulsar.

Record 11 8. Uses parameters prior to the 1977 glitch (Manchester et al. 1978, Mon.

Record 12 Not. R. Astron. Soc. 184, 35P.

Record 13 9. Crab pulsar, positive result. Thompson et al., Astrophys. J., 213, 252

Record 14 (1977).

Record 15 10. Vela pulsar, positive result. Thompson et al., Astrophys. J., 214, L17

Record 16 (1977).

L I S T I N G O F R E C O R D S F R O M D A T A F I L E

Data File Name: SAS-2 Other Data
Records 1 to 20
Data File 229
Record Length 75 bytes
Input VOLSER ADC007

```
C O L U M N
H E A D I N G        1111111111222222222233333333334444444444555555555566666666667777777777888888888889999
I N D E X      12345678901234567890123456789012345678901234567890123456789012345678901234567890123456789012345678901234567890123
```

SAS-2 Other Sources

		Name	Type	R.A.	Dec	>100MeV p/cm-2/s	Notes
Record	1						
Record	2						
Record	3						
Record	4						
Record	5						
Record	6	Lupus Loop	S	.	.	2.4E-06	1
Record	7	Monoceros Loop	S	.	.	4.4E-06	1
Record	8	Cas A	S	.	.	1.1E-06	1
Record	9	Cygnus Loop	S	.	.	1.4E-06	1
Record	10	HB 21	S	.	.	1.2E-06	1
Record	11	CTA 1	S	.	.	1.1E-06	1
Record	12	Tycho's SNR, 3C 10	S	.	.	1.1E-06	1
Record	13						
Record	14	3U 1617-15, Sco X-1	X	16.28	-15.54	0.95E-06	1
Record	15	3U 1728-24, GX 1+4	X	17.48	-24.72	4.0E-06	1
Record	16	3U 1744-26, GX 3+1	X	17.74	-26.55	2.8E-06	1
Record	17	3U 1758-25, GX 5-1	X	17.97	-25.08	2.9E-06	1
Record	18	3U 1956+31, Cyg X-1	X	19.94	+35.06	2.7E-06	1
Record	19	3U 2142+38, Cyg X-2	X	21.71	+38.09	1.2E-06	1
Record	20						

L I S T I N G O F R E C O R D S F R O M D A T A F I L E

Data File Name: SAS-2 Other Data
Records 19 to 38
Data File 229
Record Length 75 bytes
Input VOLSER ADC007

```
C O L U M N
H E A D I N G          1111111111222222222233333333334444444444555555555566666666667777777777888888888889999
I N D E X      12345678901234567890123456789012345678901234567890123456789012345678901234567890123456789012345678901234567890123

Record      19 3U 2142+38, Cyg X-2   X  21.71   +38.09  1.2E-06  1
Record      20
Record      21 Rho Oph               O    .        .    1.5E-06  1
Record      22 Corona Austrina       O    .        .    1.5E-06  1
Record      23 Jupiter               O    .        .    0.63E-06 1
Record      24 G195+5                O    .        .    4.3+/-0.9E-06  3
Record      25 A0535                 O    .        .    2.0E-06  3
Record      26
Record      27  Name              Type   R.A.    Dec   Observed          >100MeV  Notes
Record      28                                         periods          p/cm-2/s
Record      29
Record      30 3U 0900-40, Vela XR-1 B    .        .    3.4d              1.0E-06  2
Record      31 3U 1700-37            B    .        .    283s, 9.0d        1.0E-06  2,4
Record      32 Her X-1               B    .        .    1.2s, 1.7d 35.0d  0.5E-06  2
Record      33 SMC X-1               B    .        .    0.7s, 3.9d        0.7E-06  2
Record      34 Cen X-3               B    .        .    4.8s, 2.1d        2.5E-06  2,5
Record      35 Cyg X-1               B    .        .    5.6d              1.1E-06  2
Record      36 Sco X-1               B    .        .    0.8d              1.0E-06  1,2
Record      37 Cyg X-2               B    .        .   13.6d              1.2E-06  1,2
Record      38 Cyg X-3               B    .        .    4.8d              4.4+/-1.1E-06  2
```

L I S T I N G O F R E C O R D S F R O M D A T A F I L E

Data File Name: SAS-2 Other Notes
Records 1 to 15
Data File 230
Record Length 70 bytes
Input VOLSER ADC007

```
C O L U M N
H E A D I N G          1111111111222222222233333333334444444444555555555566666666667777777777888888888889999
I N D E X      12345678901234567890123456789012345678901234567890123456789012345678901234567890123456789012345678901234567890123
```

Record 1 SAS-2 Other Sources
Record 2 Notes and references
Record 3
Record 4 Types:
Record 5 S - Supernova Remnants
Record 6 X - X-ray Sources
Record 7 O - Other Sources
Record 8 B - Binary X-ray Sources
Record 9
Record 10 1. Fichtel, C.E., et. al., (1975).
Record 11 2. Lamb, et. al., (1976).
Record 12 3. Thompson, D.J., et. al., Atrophys. J. 213, 252 (1977).
Record 13 4. The flux limit applies to the 9.0d period.
Record 14 5. The relatively high limit is due to the source being near the edge
Record 15 of the field of view and in the galactic plane (from note 2).

RECORD COUNT OF TAPE GMRD1

INPUT TAPE GMRD1 ON HT0

FILE	INPUT RECS.	DATA RECORDS INPUT	MAX. SIZE	READ ERROR SUMMARY PERM	ZERO B	SHORT	UNDEF.	INPUT #RECS.	RETRIES TOTAL#
1	1	1	1920	0	0	0	0	0	0
2	1	1	5650	0	0	0	0	0	0
3	1	1	1216	0	0	0	0	0	0
4	1	1	2850	0	0	0	0	0	0
5	1	1	1050	0	0	0	0	0	0

DOUBLE END OF FILE READ AFTER FILE 5 # OF PERMANENT READ ERRORS 0

START TIME 09/24/90 06:57:57 STOP TIME 09/24/90 06:58:08

$$

DUPE AND COMPARE OF ~~GMDA1~~ GMRA1 ONTO DMRC1

INPUT TAPE GMDA1 ON HT0 ST
OUTPUT TAPE DMRC1 ON HT1

DATA INPUT DAC 5
OPTIONS USED: DUPE AND COMPARE # FILES 5 ERRORS/TAPE 10 DUMP

FILE	INPUT RECS.	DATA RECORDS INPUT	DATA RECORDS OUTPUT	MAX. SIZE	READ ERROR SUMMARY PERM	ZERO B	SHORT	UNDEF.	INPUT RETRIES #RECS.	TOTAL#	WRITE ERRORS PERM	UNDEF.	OUPUT RETRIES #RECS.	TOTAL#
1	1	1	1	1920	0	0	0	0	0	0	0	0	0	0
2	1	1	1	5650	0	0	0	0	0	0	0	0	0	0
3	1	1	1	1216	0	0	0	0	0	0	0	0	0	0
4	1	1	1	2850	0	0	0	0	0	0	0	0	0	0
5	1	1	1	1050	0	0	0	0	0	0	0	0	0	0

DUPE OF GMDA1 ONTO DMRC1 COMPLETED, # FILES COPIED 5 # PERMANENT READ ERRORS 0 # OUTPUT TAPES 1

TAPE	FILE	INPUT RECS.	DATA RECORDS INPUT	DATA RECORDS OUTPUT	MAX. SIZE	READ ERROR SUMMARY PERM	ZERO B	SHORT	UNDEF.	INPUT RETRIES #RECS.	TOTAL#
GMDA1	1	1	1		1920	0	0	0	0	0	0
DMRC1	1	1	1		1920	0	0	0	0	0	0
GMDA1	2	1	1		5650	0	0	0	0	0	0
DMRC1	2	1	1		5650	0	0	0	0	0	0
GMDA1	3	1	1		1216	0	0	0	0	0	0
DMRC1	3	1	1		1216	0	0	0	0	0	0
GMDA1	4	1	1		2850	0	0	0	0	0	0
DMRC1	4	1	1		2850	0	0	0	0	0	0
GMDA1	5	1	1		1050	0	0	0	0	0	0
DMRC1	5	1	1		1050	0	0	0	0	0	0

JOB COMPLETED, # FILES COMPARED 5

START TIME 09/24/90 12:50:39 STOP TIME 09/24/90 12:51:08

```
$$
$ASS IN HT1
$EXE TPDUMP BS
```

```
$REW IN
$ASS IN HT1
$NOP
$NOP
$NOP
$NOP   *************** GMRC1 ****************
$EXE TPLIST BS

INPUT PARAMETERS ARE:  ED AL 5 1 1

 TAPE NO.   1              FILE NO.   1
 RECORD   1                LENGTH   1920
Fairall 9      S   1.333  -59.1   1.8E-06   2.0E-06   6.1E+453C 120          S   1.500  + 5.3   2.4E-0
6   1.7E-06   2.7E+45Akn 120        S   5.233  - 0.2   1.8E-06   1.5E-06   2.3E+45MC G+08-11-011  S
5.303  +46.6   1.4E-06   1.9E-06   1.1E+45NGC 3227       S  10.350  +20.1   1.6E-06   8.9E-07   1.4E
+43NGC 3783      S  11.617  -37.5  10.8E-06   3.1E-06   3.7E+44NGC 4051       S  12.000  +44.8   2.3
E-06   1.9E-06   1.5E+43NGC 4151       S  12.133  +39.7   2.9E-06   7.3E-07   1.1E+43IC 4329 A      S
  13.767  -30.0   2.1E-06   1.2E-06   3.3E+44MKN 279        S  13.867  +69.6   2.2E-06   1.2E-06   1
.6E+44NGC 5548      S  14.250  +25.5   2.2E-06   1.4E-06   5.6E+44NGC 6814       S  19.667  -10.4
6.3E-06   1.3E-06   5.2E+43MKN 509        S  20.700  -10.9   3.0E-06   2.1E-06   3.8E+453C 111
  N   4.250  +37.9   5.4E-06   1.7E-06   5.7E+453C 382         N  18.550  +30.4   7.5E-06   8.2E-07
  4.0E+453C 445        N  20.350  - 2.3   3.7E-06   2.0E-06   9.2E+45PKS 0548-322  B   5.800  -32.2
   7.0E-06   2.9E-06   2.0E+46MKN 421        B  11.017  +38.4   3.5E-06   7.8E-07   1.1E+45MKN 501
     B  16.867  +39.8   7.4E-06   4.1E-06   6.8E+45BL Lac         B  22.000  +42.0   2.3E-06   2.0E-
06   1.3E+464U 0241+61     Q   2.683  +62.3   2.1E-06   3.5E-06   9.7E+453C 273         Q  12.450  +
2.2   2.8E-06   1.6E-06   5.7E+46NGC 2110       E   5.833  - 7.5   5.3E-06   2.2E-06   1.6E+44NGC 29
92      E   9.717  -14.1   2.3E-06   5.3E-07   4.0E+43A 0945-30      E   9.750  -30.7   2.8E-06   1.
4E-06   1.4E+44NGC 3134(M82) E   9.983  +70.0   9.7E-06   5.0E-06   3.5E+42NGC 5506       E  14.167
 - 2.9   2.7E-06   1.5E-06   7.2E+43M 31           0   0.683  +41.0                 1.4E-06          SMC
          0   0.917  -72.0              1.0E-06          LMC              0   5.333  -69.5
 2.4E-06          M 87              0  12.467  +12.7   1.1E-06   6.4E-07   1.5E+43Cen A          0  13.3
67  -42.7   6.4E-06   2.0E-06   2.9E+42

 TAPE NO.   1              FILE NO.   2
 RECORD   1                LENGTH   5650
0105+65  1.284       12.4    1.0    1.8  37.20  1  0136+57  0.2724      10.687  2.50    2.2  38.1   2
0138+59  1.223        0.2    3.0    1.6  38.11  1  0154+61  2.3517     188.990  1.60    2.6  37.8   2
,30450-18  0.549       5.78   2.4    0.6  37.49  1  0525+21  3.745       40.06   1.9     1.2  37.59
2  0531+21  0.0331   442.439  2.0    3.7  38.34  9  0540+23  0.246       15.43   2.8     1.0  37.85
 1  0611+22  0.335     59.73   3.5    1.2  38.11  1  0628-28  1.244        2.51   1.4     1.1  37.28
  1  0656+14  0.3849   1.600  0.40    3.6  36.7   2  0727-18  0.5102     18.948  1.50    1.4  37.5
   2  0740-28  0.1668  16.832  1.50    1.0  37.3   2,30743-53  0.2148      2.730  2.40    4.0  38.
5   2  0818-13  1.238    2.11   1.6    1.0  37.36  1  0833-45  0.0892    124.687  0.50   29.5  37
.67  10 0834+06  1.274    6.80   0.48   1.3  36.43  1  0919+06  0.4306     13.725  1.00    1.4  3
7.1   2  0922-52  0.7463  35.477  2.70   2.5  38.2   2  0940-55  0.6644     22.739  4.90    3.0
38.8   2  0941-56  0.8081  39.617  4.90   3.2  38.9   2  0943+10  1.098       3.53   0.63    1.0
 36.56  1  0950+08  0.253    0.23   0.10   1.1  35.00  1  0959-54  1.4366     51.665  3.30    2.9
  38.5   2  1001-47  0.3071  22.074  1.60   3.7  38.0   2  1055-52  0.1971      5.834  0.92    4.
3  37.6   2  1112+50  1.656    2.6   0.31   1.7  36.18  1  1133+16  1.188       3.73   0.18    0
.8  35.36  1  1133-55  0.3647   8.228  2.90   6.2  38.7   2  1237+25  1.382       0.96   0.37
0.7  35.93  1  1323-62  0.5299  18.890  7.90  16.0  40.0   2  1356-60  0.1275      6.339  8.80
 5.3  39.6   2  1358-63  0.8428  16.905  2.90   6.7  38.7   2  1508+55  0.740       5.04   0.92
  1.4  36.04  1  1509-58  0.1502  1520.0  4.20   9.1  39.2   2  1541+09  0.748       0.41   2.5
   1.0  37.75  1  1552-23  0.5326   0.700  1.80   3.0  38.0   2,51552-31  0.5181     0.050  2.6
0   2.2  38.2   2,51555-55  0.9572  20.479  6.30   3.2  39.1   2  1557-50  0.1926     5.063  7.
80   5.0  39.5   2  1558-50  0.8642  69.572  2.50   4.3  38.4   2  1600-27  0.7783     2.920  1
.60   1.5  37.6   2  1604-00  0.422    0.31   0.4   0.9  36.11  1  1641-45  0.4551    20.137
5.30   2.4  38.8   2,81642-03  0.388   1.78   0.16   0.9  35.32  1  1648-17  0.9734     3.042
 1.10   0.9  37.0   2,41700-32  1.212   0.7   0.47   1.8  36.56  1  1702-18  0.2990     4.140
  0.74   3.0  37.2   2,41706-16  0.653   6.37   0.16   1.1  35.54  1  1707-53  0.8992    15.49
4  3.60   2.3  38.5   2  1717-29  0.620   0.8   1.6   2.2  37.71  1  1718-32  0.477      0.7
   4.4   2.4  38.62  1  1719-37  0.2362  10.816  2.50   1.3  37.9   2,31727-47  0.8297   163.
672  4.10   2.2  38.6   2,31729-41  0.6280  12.838  6.10   1.7  38.8   2  1730-22  0.872      0
```

.0 1.6 1.5 37.54 1 1742-30 0.367 10.7 2.9 2.5 38.28 1 1747-46 0.7424
1.295 0.66 2.3 37.0 3 1749-28 0.563 8.15 1.7 2.4 37.79 1 1813-26 0.593
0.3 3.5 1.4 38.18 1 1818-04 0.5981 6.338 1.50 3.5 37.9 3 1819-22 1.874
0.6 5.7 2.3 38.83 1 1821-19 0.1893 5.238 6.80 2.1 39.0 2 1822-09 0.7690
52.320 0.56 2.1 36.8 3 1826-17 0.307 5.59 8.8 1.8 39.11 1 1831-03 0.687
41.5 9.4 3.2 39.38 1 1831-04 0.290 0.1 2.3 3.8 38.26 1 1834-10 0.5627
11.775 8.90 1.5 39.1 2 1845-04 0.598 51.9 4.9 3.6 38.89 1 1845-01 0.659
5.2 5.4 3.1 38.91 1 1846-06 1.451 45.7 5.7 3.6 39.04 1 1857-26 0.612
0.16 1.4 0.9 37.20 1 1859+03 0.655 7.50 15.0 1.2 39.38 1 1900+05 0.74
66 12.896 4.20 11.0 39.3 2 1900-06 0.432 3.4 9.0 3.6 39.41 1 1900+01 0.7
29 4.12 8.8 2.9 39.30 1 1907+00 1.017 5.4 4.3 3.1 38.72 1 1907+02 0.
495 2.76 7.5 3.6 39.26 1 1907+10 0.284 2.69 5.0 4.9 39.04 1 1910+20 2
.233 9.5 3.2 3.9 38.56 1 1911-04 0.826 4.06 3.7 2.1 38.41 1 1913+16
0.0590 0.009 5.20 2.2 38.9 7 1915+13 0.195 7.20 3.2 2.1 38.28 1 1916+14
1.1809 211.40 0.75 3.2 37.3 2,51917+00 1.272 7.67 3.4 1.0 38.00 1 1919+19
0.821 0.8 5.3 1.3 38.52 1 1919+21 1.337 1.35 0.42 1.3 36.32 1 1920+2
1 1.078 8.2 9.2 2.7 39.32 1 1924+16 0.5798 18.004 4.30 1.8 38.5 2 1927+
13 0.7600 3.661 6.40 3.8 39.2 2,51929+10 0.227 1.16 0.11 1.6 35.23 1 1930
+22 0.1444 57.780 7.00 3.9 39.3 2 1933+16 0.359 6.00 6.0 1.7 38.74 1 194
4+17 0.441 0.024 0.55 1.6 36.64 1 1946+35 0.717 7.05 5.4 2.1 38.74 1 19
51+32 0.039 5.9 2.0 3.7 38.15 11 1952+29 0.427 0.003 0.67 1.6 36.81 1 2
002+31 2.111 74.58 7.8 2.0 39.04 1 2016+28 0.558 0.15 0.48 1.8 35.57 1
2020+28 0.343 1.90 2.0 2.0 37.86 1 2021+51 0.529 3.04 0.8 1.7 36.99 1
2045-16 1.962 10.97 0.43 1.5 36.40 1 2106+44 3.415 0.1 0.78 1.7 36.97 1
2111+46 1.015 0.72 4.0 1.5 38.34 1 2148+63 0.380 0.16 0.84 1.7 37.04
1 2154+40 1.525 2.9 3.2 1.6 38.18 1 2217+47 0.538 2.76 1.6 1.0 37.36
1 2223+65 0.683 9.5 0.73 1.2 36.76 1 2255+58 0.368 5.75 2.1 1.4 37.75
1 2305+55 0.475 0.1 1.6 1.0 37.36 1 2319+60 2.256 7.6 2.5 1.4 37.9
0 1 2324+60 0.234 0.36 0.76 1.5 36.89 1 2351+61 0.9448 16.226 2.50 1.5 38.
0 2

TAPE NO. 1 FILE NO. 3
RECORD 1 LENGTH 1216
SAS-2 Pulsars

Notes and References

1. Ogelman, H.B., et al. Astrophys. J. 209, 584, (1976).
2. Thompson, D.J, et al., Astron. Astrophys. 127, 220, (1983). 3. Also appears on list of Ogelman et al., updated parameters. 4. Distance uncertainty relatively large. 5. Based on 10 bin phase plot.
6. Upper limit based on search of periods around the nominal value. 7. Binary pulsar. 8. Uses parameters prior to the 1977 glitch (Manchester et al. 1978, Mon. Not. R. Astron. Soc. 184, 35P.
9. Crab pulsar, positive result. Thompson et al., Astrophys. J., 213, 252 (1977). 10. Vela pulsar, positive result. Thompson et al., Astrophys. J., 214, L17 (1977).

TAPE NO. 1 FILE NO. 4
RECORD 1 LENGTH 2850
SAS-2 Other Sources

Name Type R.A. Dec >100MeV Notes
p/cm^2/s

S . . 2.4E-06 1 Lupus Loop S . . 4.4E
-06 1 Monoceros Loop S . . 1.1E-06 1 Cas A
Cygnus Loop S . . 1.4E-06 1 HB 21
S . . 1.2E-06 1 CTA 1 S . . 1
.1E-06 1 Tycho's SNR, 3C 10 S . . 1.1E-06 1
3U 1617-15, Sco
X-1 X 16.28 -15.54 0.95E-06 1 3U 1728-24, GX 1+4 X 17.48 -24.72
4.0E-06 1 3U 1744-26, GX 3+1 X 17.74 -26.55 2.8E-06 1
3U 1758-25, GX 5-1 X 17.97 -25.08 2.9E-06 1 3U 1956+31,
Cyg X-1 X 19.94 +35.06 2.7E-06 1 3U 2142+38, Cyg X-2 X 21.71 +38
.09 1.2E-06 1
Rho Oph O . . 1.5E-06 1 Corona Au
strina O . . 1.5E-06 1 Jupiter O . .

```
.    0.63E-06 1                    G195+5                 O    .        .    4.3+/-0.9E-06  3
                A0535                O    .        .    2.0E-06  3
                                                                  Name                Type   R.A.
   Dec    Observed          >100MeV  Notes                                          periods
   p/cm^2/s                                                                                  3U
0900-40. Vela XR-1 B    .        .    3.4d          1.0E-06  2      3U 1700-37              B
.        .    283s, 9.0d        1.0E-06  2,4    Her X-1              B    .        .    1.2s, 1.7d
 35.0d  0.5E-06  2      SMC X-1              B    .        .    0.7s, 3.9d        0.7E-06  2
Cen X-3              B    .        .    4.8s, 2.1d        2.5E-06  2,5    Cyg X-1              B
   .        .    5.6d          1.1E-06  2      Sco X-1              B    .        .    0.8d
          1.0E-06  1,2    Cyg X-2              B    .        .    13.6d          1.2E-06  1,2
   Cyg X-3              B    .        .    4.8d          4.4+/-1.1E-06  2

 TAPE NO.   1              FILE NO.   5
 RECORD   1                LENGTH   1050
                       SAS-2 Other Sources                                                Notes an
d references
            Types:                                                                  S - Supernova Re
mnants                                                X - X-ray Sources
                        O - Other Sources                                                  B -
Binary X-ray Sources
                                  1. Fichtel, C.E., et. al., (1975).
        2. Lamb, et. al., (1976).                                          3. Thompson, D.J., et
. al., Atrophys. J. 213, 252 (1977).          4. The flux limit applies to the 9.0d period.
                  5. The relatively high limit is due to the source being near the edge    of the
 field of view and in the galactic plane (from note 2).

***** JOB DONE.
$WEO LPS

$$
$ASS IN  HT0
$EXE TPDUMP BS
```